This Drawing is the property of Initiative Engg. and shall not be copied or used in any way without their prior permission

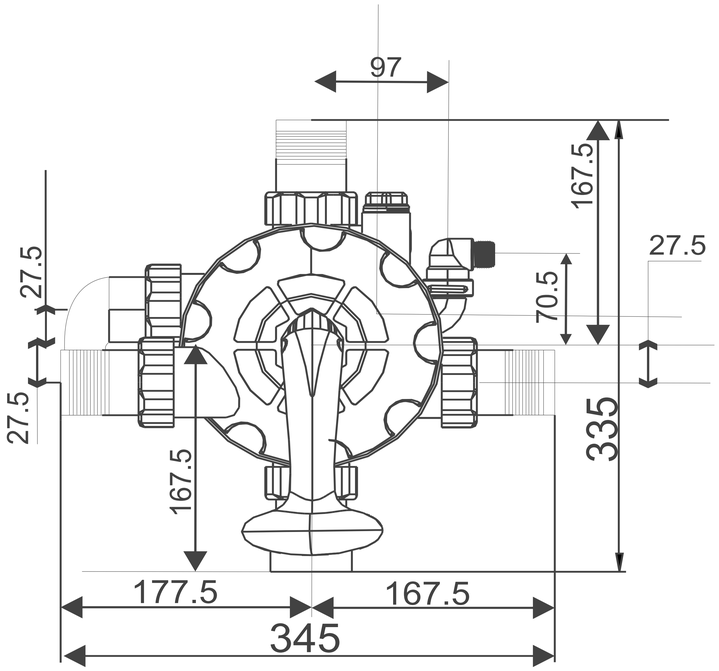

FRONT VIEW

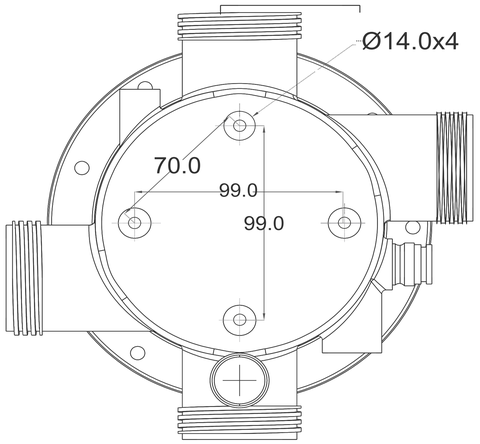

BOTTOM VIEW

R

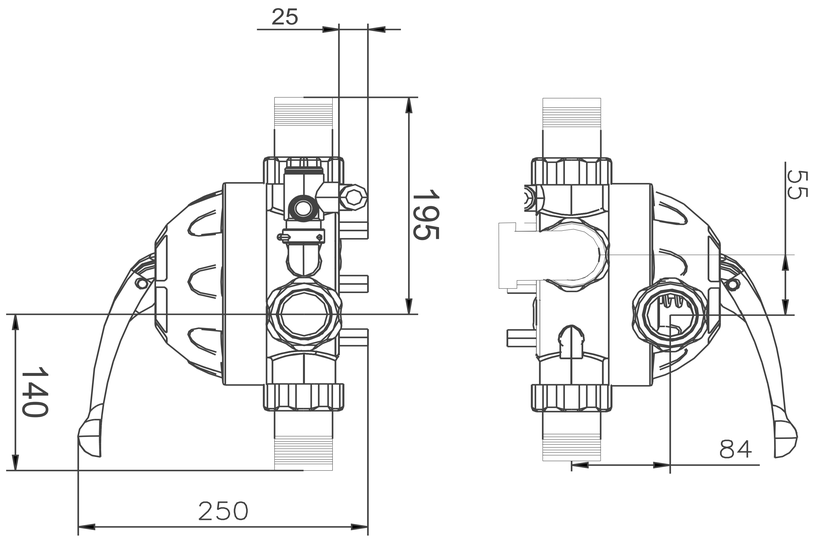

SIDE VIEW

Revision No	Date	Modification	Modified By	Checked	Approved
1					

	Name	Date
Drawn	S.B.	20/11/2018
Checked	R.C./V.P.	
Approved	R.C/V.P.	

INITIATIVE ENGINEERING

Component Name: –	S1240FF			Projection:	
Scale: – 1:1	Sheet: 1 of 1	Project: –		Drawing No.–	DWG/GA/S1240FF