This Drawing is the property of Initiative Engg. and shall not be copied or used in any way without their prior permission

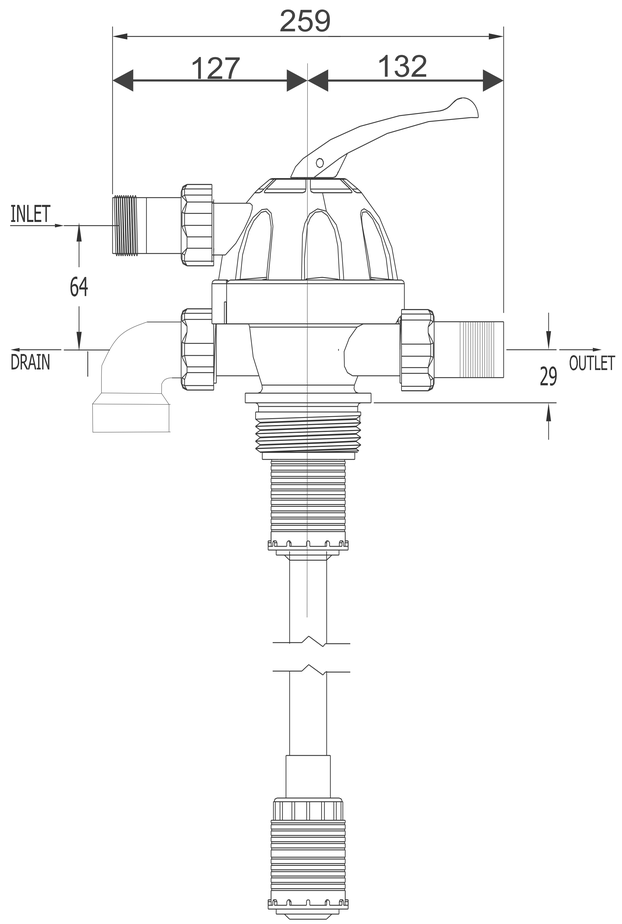

FRONT VIEW

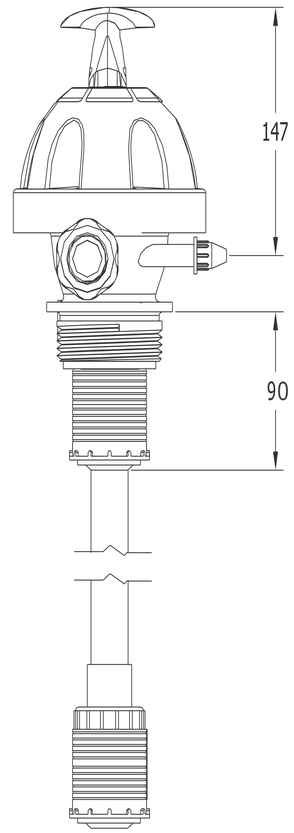

SIDE VIEW

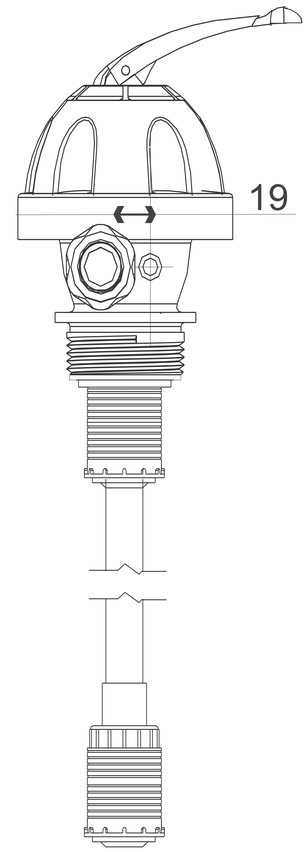

SIDE VIEW

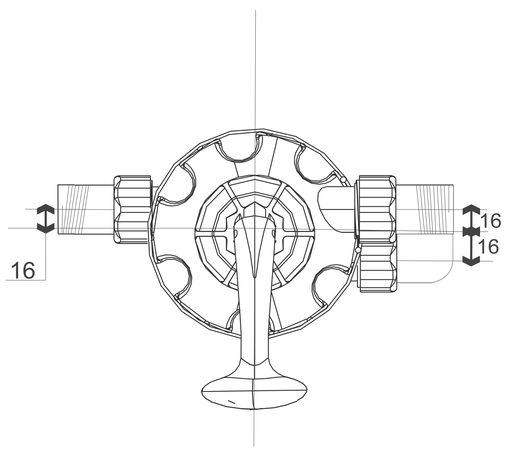

TOP VIEW

Revision No	Date	Modification	Modified By	Checked	Approved
1					

	Name	Date
Drawn	S.B.	20/11/2018
Checked	R.C./V.P.	
Approved	R.C/V.P.	

INITIATIVE ENGINEERING

Component Name: –	S0225TF			Projection:	
Scale: – 1:1	Sheet: 1 of 1	Project: –		Drawing No.–	DWG/GA/S0225TF