This Drawing is the property of Initiative Engg. and shall not be copied or used in any way without their prior permission

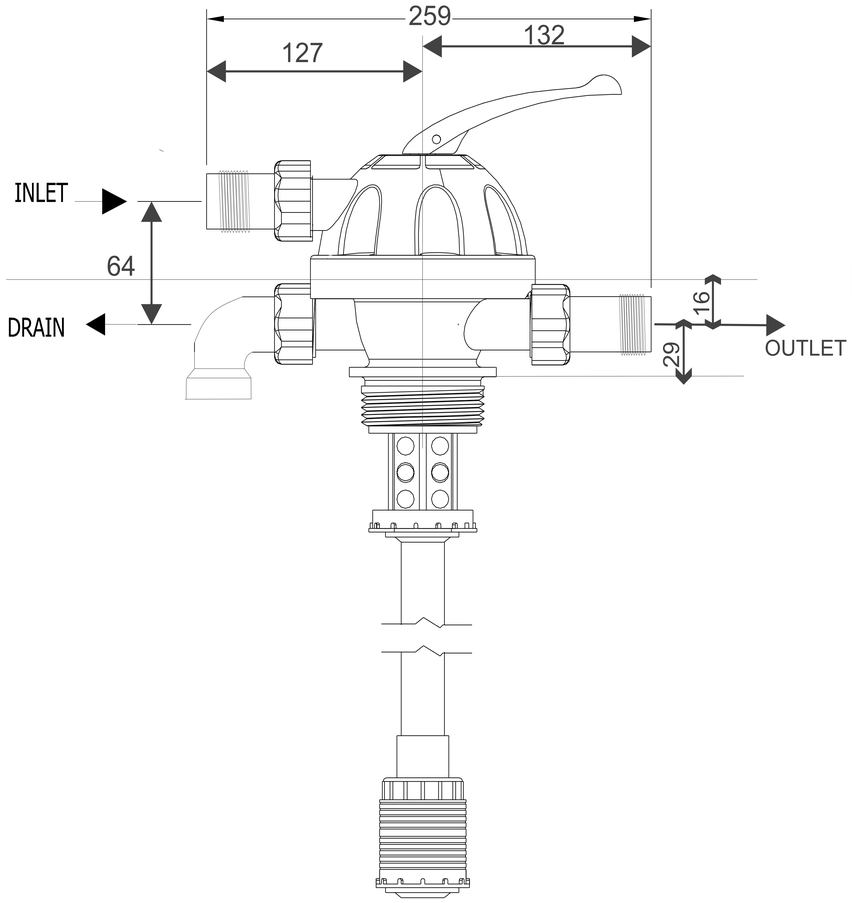

FRONT VIEW

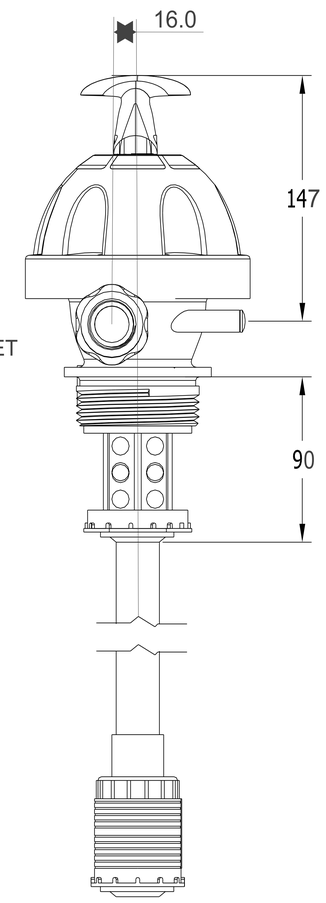

SIDE VIEW

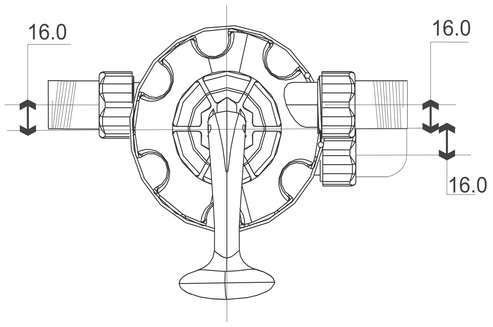

TOP VIEW

Revision No	Date	Modification	Modified By	Checked	Approved
1					
	Name	Date	INITIATIVE ENGINEERING		
Drawn	S.B.	20/11/2018			
Checked	R.C./V.P.				
Approved	R.C/V.P.				
Component Name: –	F0225TF			Projection:	
Scale: – 1:1	Sheet: 1 of 1	Project: –		Drawing No.–	DWG/GA/F0225TF