This Drawing is the property of Initiative Engg. and shall not be copied or used in any way without their prior permission

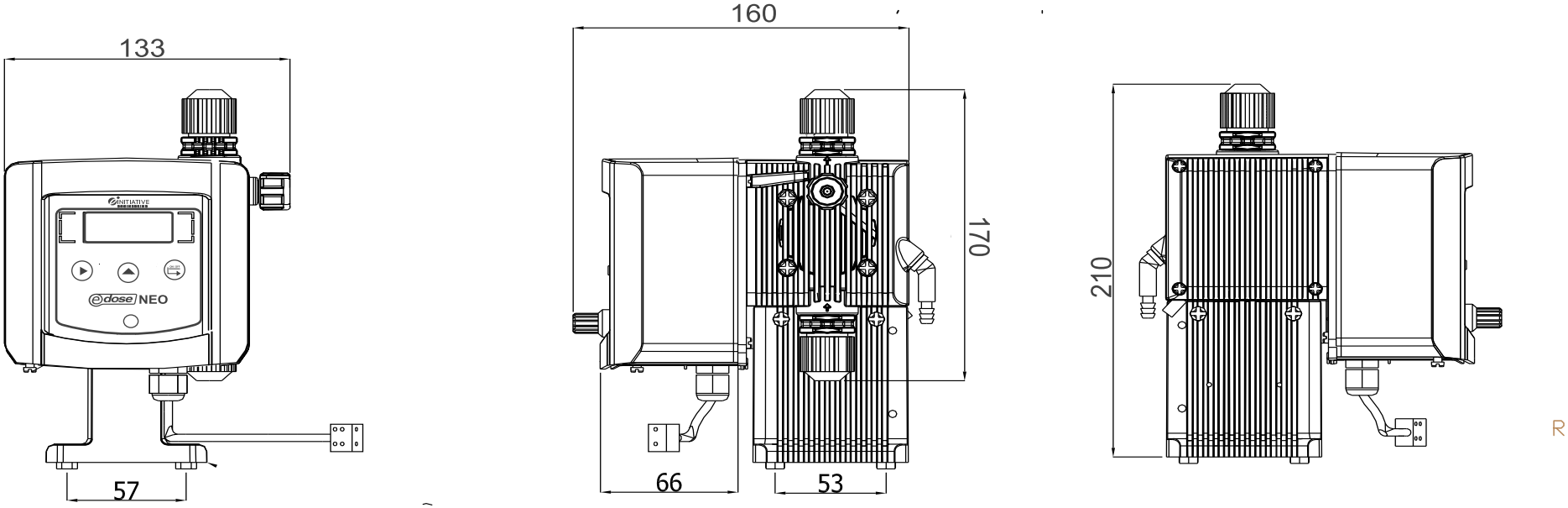


| Revision No | Date | Modification | Modified By | Checked | Approved |
|---|---|---|---|---|---|
| 1 | | | | | |
| | | | | | |
| | | | | | |

| | Name | Date |
|---|---|---|
| Drawn | S.B. | 30/11/2018 |
| Checked | R.C./V.P. | |
| Approved | R.C/V.P. | |

INITIATIVE ENGINEERING

| | | | | | |
|---|---|---|---|---|---|
| Component Name: – | EDOSE NEO | | | Projection: | |
| Scale: – 1:1 | Sheet: 1 of 1 | Project: – | | Drawing No.– | DWG/EDN/GA |