This Drawing is the property of Initiative Engg. and shall not be copied or used in any way without their prior permission

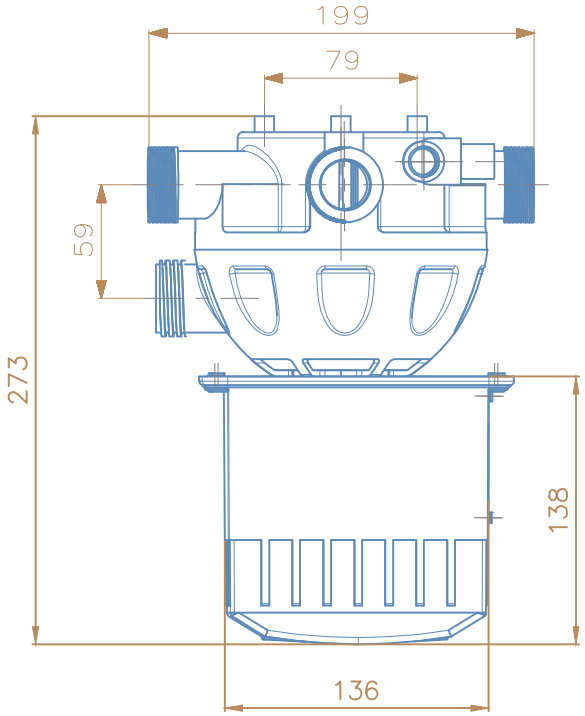

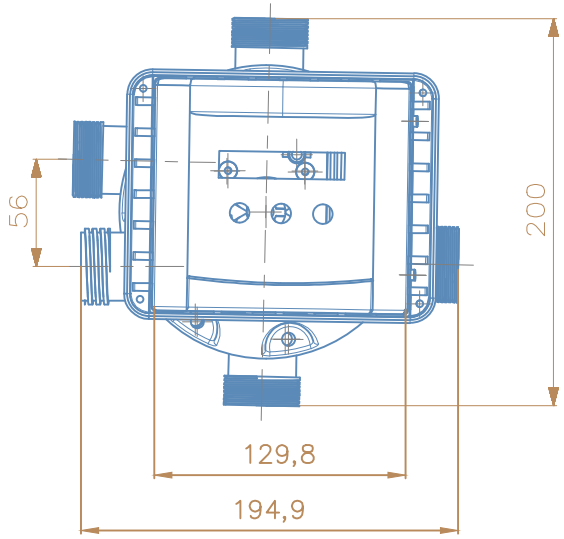

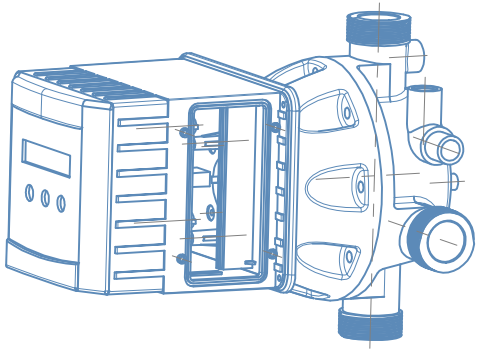

Revision No	Date	Modification	Modified By	Checked	Approved
	29-01-18				

	Name	Date
Drawn	S.B.	29-01-18
Checked	R.C./V.P.	29-01-18
Approved	R.C./V.P.	29-01-18

INITIATIVE ENGINEERING
AN ISO 9001:2015 ORGANIZATION

Component Name: –	25 NB SM AMPV GA			Projection:	
Scale: – 1:1	Sheet: 1 of 1	Project: –	VALVE	Drawing No.–	DWG/25NBSMAMPV/GA